DocuSign Envelope ID: 176B53D9-CE85-4A3A-BFC6-B411219DD6EE

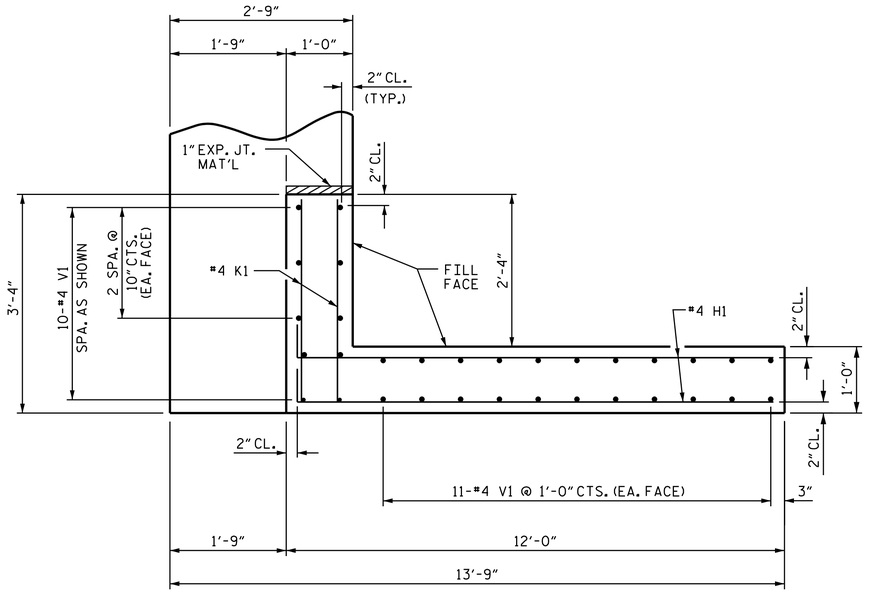

PLAN OF WING (W1)

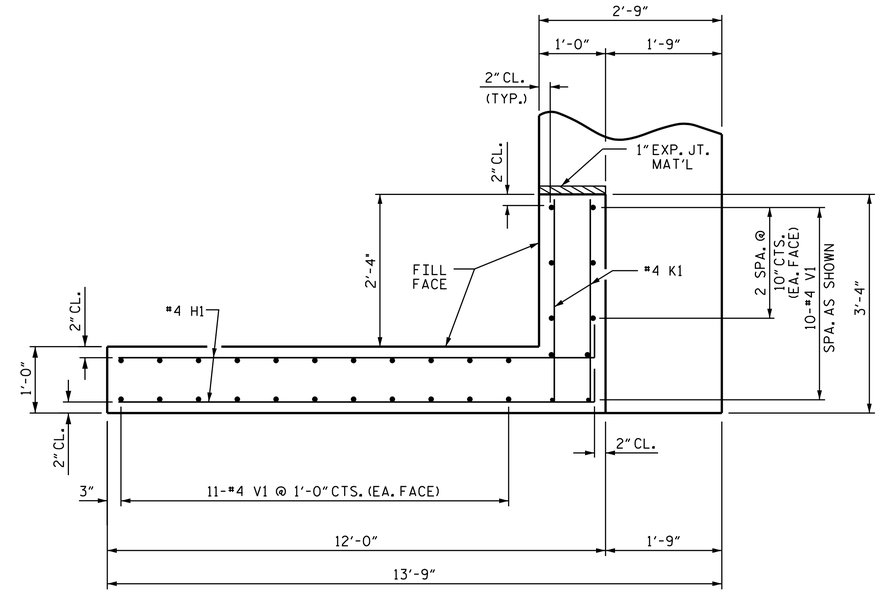

PLAN OF WING (W2)

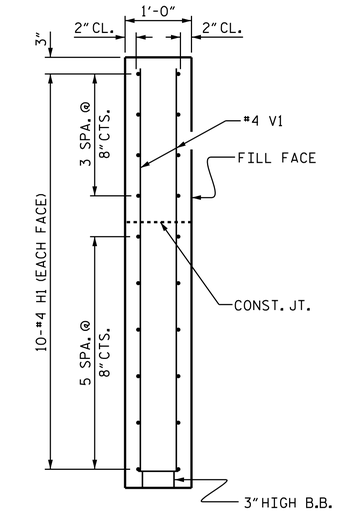

SECTION X-X

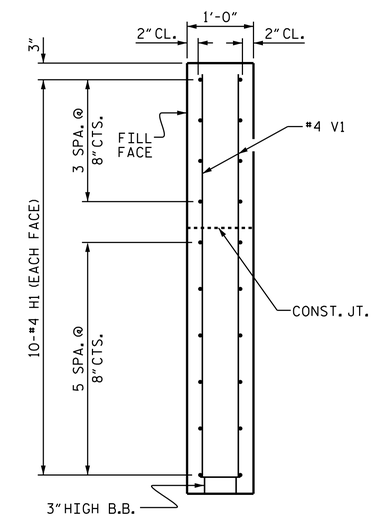

SECTION Y-Y

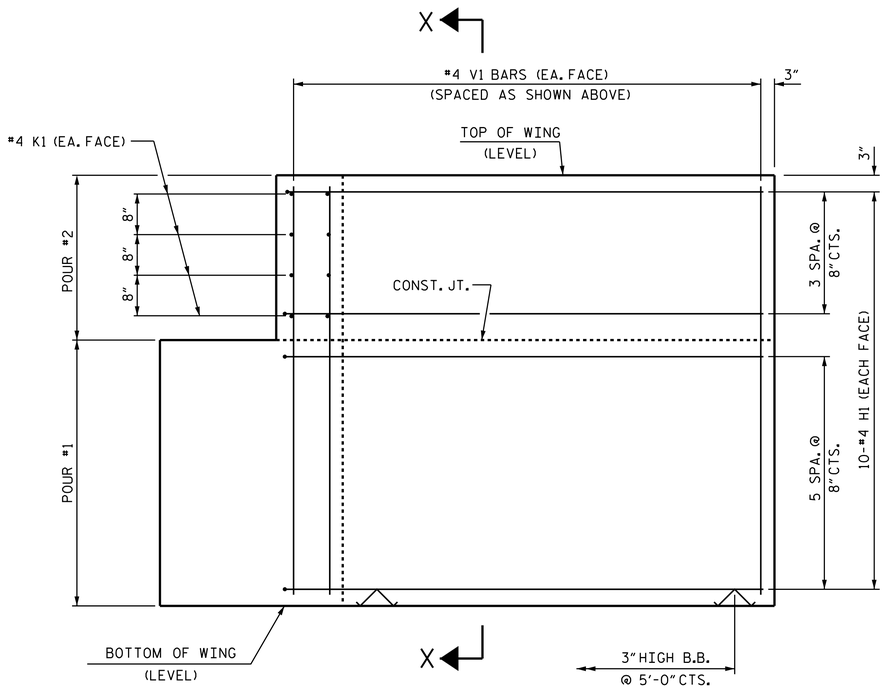

ELEVATION OF WING (W1)

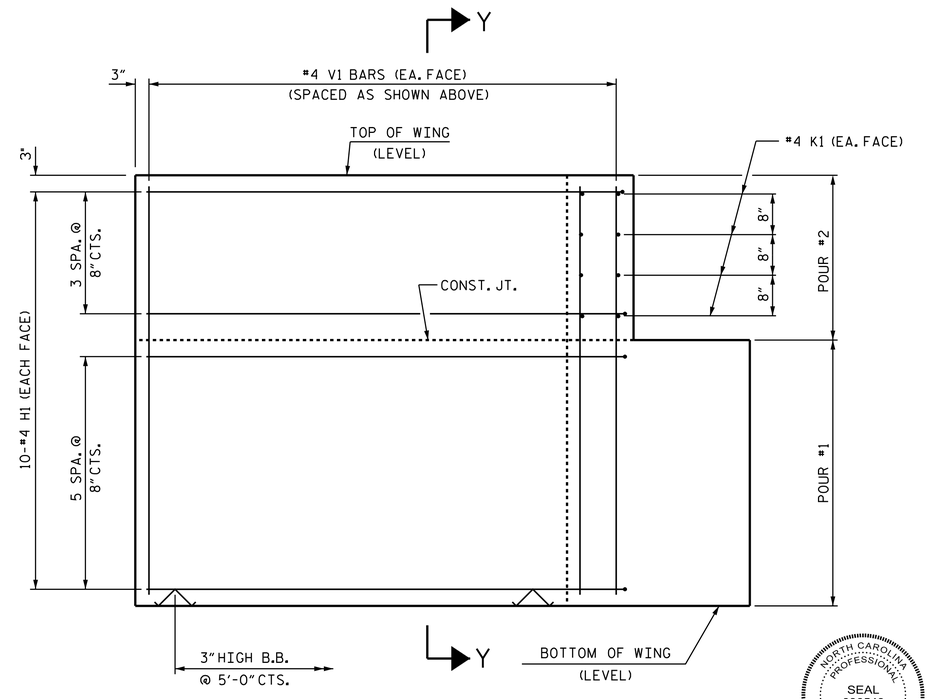

ELEVATION OF WING (W2)

PROJECT NO. 17BP.1.R.92
NORTHAMPTON COUNTY
STATION: 14+22.50 -L-

SHEET 2 OF 3

STATE OF NORTH CAROLINA
DEPARTMENT OF TRANSPORTATION
RALEIGH

SUBSTRUCTURE
END BENT No. 1
WING DETAILS

NORTH CAROLINA PROFESSIONAL SEAL 036548 ENGINEER DANIEL M. BURGINDY
DocuSigned by: Daniel M. Burgindy
5/4/2021

ASSEMBLED BY : CAB	DATE : 4/19		
CHECKED BY : MHR	DATE : 6/19		
DRAWN BY : WJH 12/11	REV. 4/15	MAA/TMG	
CHECKED BY : AAC 12/11			

WING DETAILS

DOCUMENT NOT CONSIDERED FINAL UNLESS ALL SIGNATURES COMPLETED

REVISIONS						
NO.	BY:	DATE:	NO.	BY:	DATE:	
1			3			
2			4			

SHEET NO. S-13
TOTAL SHEETS 22

STD. NO. EB_30_90S4