DocuSign Envelope ID: 176B53D9-CE85-4A3A-BFC6-B411219DD6EE

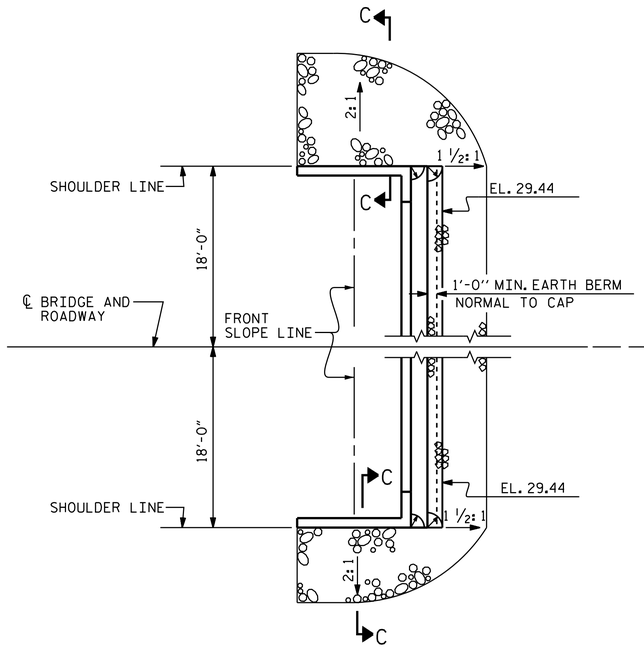

END BENT 1

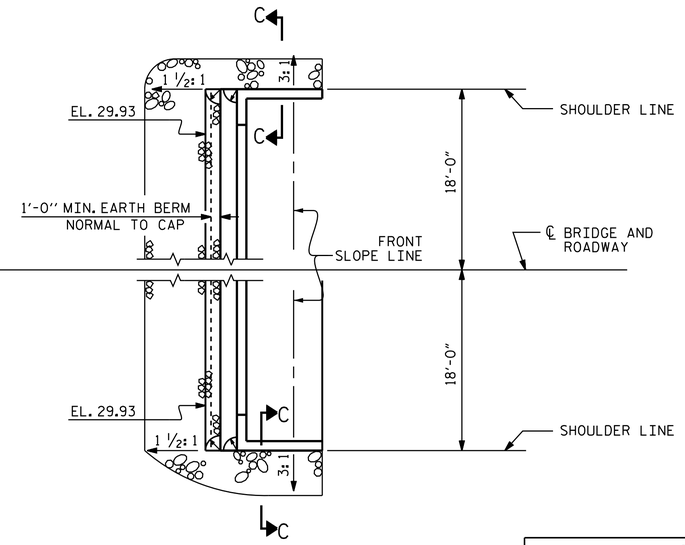

END BENT 2

PLAN

ESTIMATED QUANTITIES		
BRIDGE @ STA. 14+22.50 -L-	RIP RAP CLASS II (2'-0" THICK)	GEOTEXTILE FOR DRAINAGE
	TONS	SQUARE YARDS
END BENT 1	95	105
END BENT 2	61	68

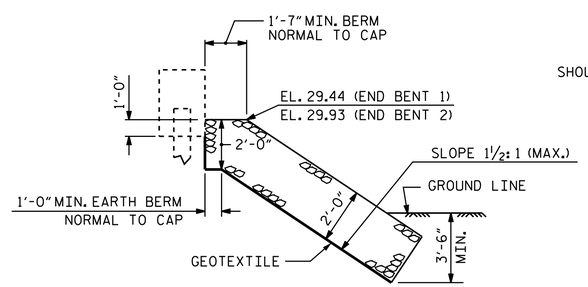

℄ SECTION
BERM RIP RAPPED

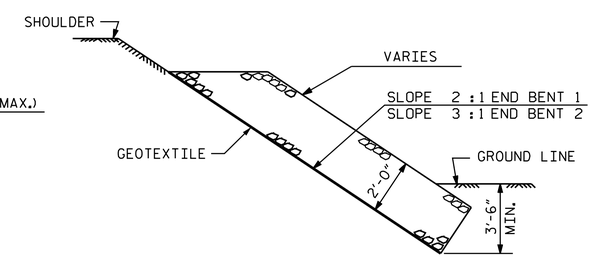

SECTION C-C

PROJECT NO. 17BP.1.R.92
NORTHAMPTON COUNTY
STATION: 14+22.50 -L-

STATE OF NORTH CAROLINA
DEPARTMENT OF TRANSPORTATION
RALEIGH
STANDARD
RIP RAP DETAILS

NORTH CAROLINA PROFESSIONAL SEAL 036548 ENGINEER DANIEL R. BURGUNDY
Daniel R. Burgundy
5/4/2021 FEEC4B7...

ASSEMBLED BY : CAB	DATE : 4/19
CHECKED BY : MHR	DATE : 6/19
DRAWN BY : REK 1/84	REV. 10/1/11 MAA/GM
CHECKED BY : RDU 1/84	REV. 12/21/11 MAA/GM
	REV. 12/17 MAA/THC

DOCUMENT NOT CONSIDERED FINAL UNLESS ALL SIGNATURES COMPLETED

REVISIONS							
NO.	BY:	DATE:	NO.	BY:	DATE:	SHEET NO.	S-21
1			3			TOTAL SHEETS	22
2			4				

STD. NO. RR1