DocuSign Envelope ID: 176B53D9-CE85-4A3A-BFC6-B411219DD6EE

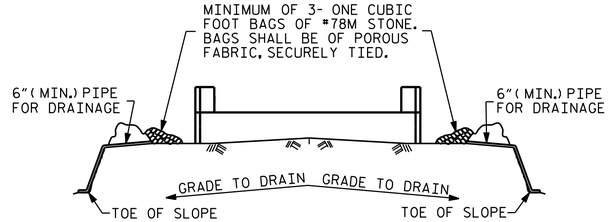

BAGGED STONE AND PIPE SHALL BE PLACED IMMEDIATELY AFTER COMPLETION OF END BENT EXCAVATION. PIPE MAY BE EITHER CONCRETE, CORRUGATED STEEL, CORRUGATED ALUMINUM ALLOY, OR CORRUGATED PLASTIC. PERFORATED PIPE WILL NOT BE ALLOWED.

BAGGED STONE SHALL REMAIN IN PLACE UNTIL THE ENGINEER DIRECTS THAT IT BE REMOVED. THE CONTRACTOR SHALL REMOVE AND DISPOSE OF SILT ACCUMULATIONS AT BAGGED STONE WHEN SO DIRECTED BY THE ENGINEER. BAGS SHALL BE REMOVED AND REPLACED WHENEVER THE ENGINEER DETERMINES THAT THEY HAVE DETERIORATED AND LOST THEIR EFFECTIVENESS.

NO SEPARATE PAYMENT WILL BE MADE FOR THIS WORK AND THE ENTIRE COST OF THIS WORK SHALL BE INCLUDED IN THE UNIT CONTRACT PRICE BID FOR THE SEVERAL PAY ITEMS.

TEMPORARY DRAINAGE AT END BENT

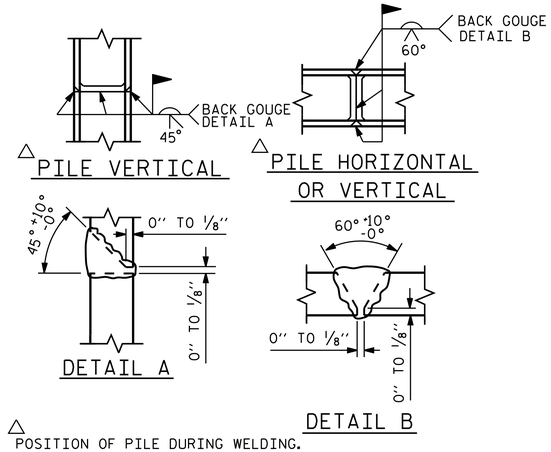

△ POSITION OF PILE DURING WELDING.

PILE SPLICE DETAILS

BAR TYPES

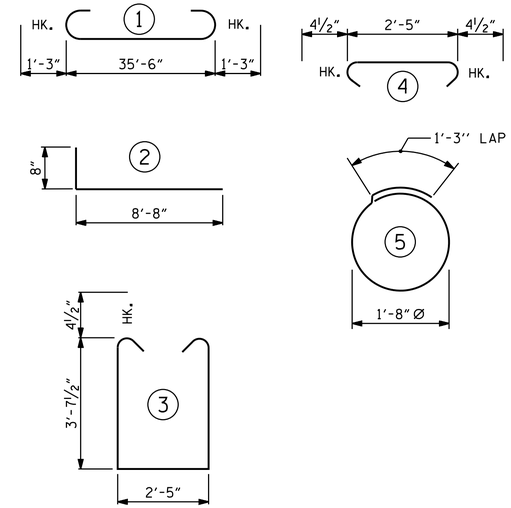

ALL BAR DIMENSIONS ARE OUT TO OUT.

BILL OF MATERIAL FOR ONE END BENT

BAR	NO.	SIZE	TYPE	LENGTH	WEIGHT
B1	8	#9	1	38'-0"	1034
B2	28	#4	STR	19'-1"	357
B3	9	#4	STR	2'-5"	15
D1	20	#6	STR	1'-6"	45
H1	40	#4	2	9'-4"	249
K1	16	#4	STR	2'-11"	31
S1	46	#4	3	10'-5"	320
S2	46	#4	4	3'-2"	97
S3	20	#4	5	6'-6"	87
V1	52	#4	STR	6'-2"	214

REINFORCING STEEL (FOR ONE END BENT) 2449 LBS.

CLASS A CONCRETE BREAKDOWN (FOR ONE END BENT)

POUR #1 CAP, LOWER PART OF WINGS & COLLARS 17.9 C.Y.

POUR #2 UPPER PART OF WINGS 2.3 C.Y.

TOTAL CLASS A CONCRETE 20.2 C.Y.

HP 12 X 53 STEEL PILES
NO: 5 LIN. FT.= 310

PILE DRIVING EQUIPMENT SETUP FOR HP 12 X 53 STEEL PILES NO: 5

PILE REDRIVES NO: 3

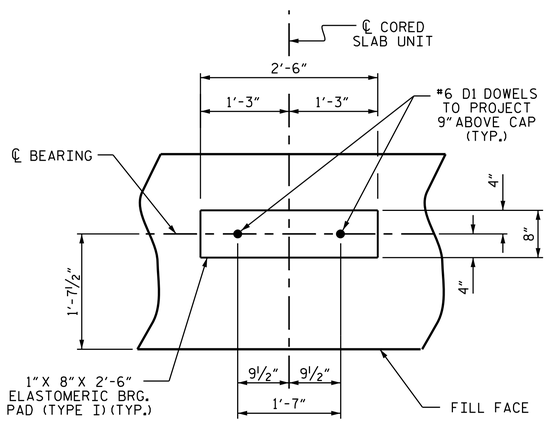

DETAIL "A"

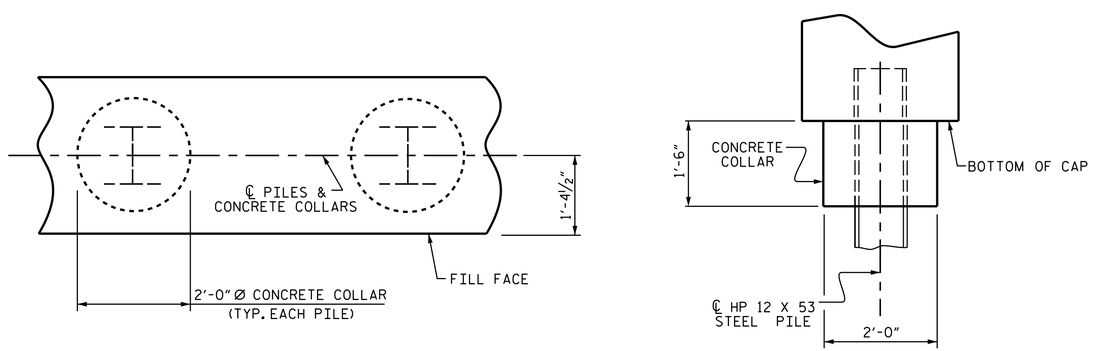

CORROSION PROTECTION FOR STEEL PILES DETAIL

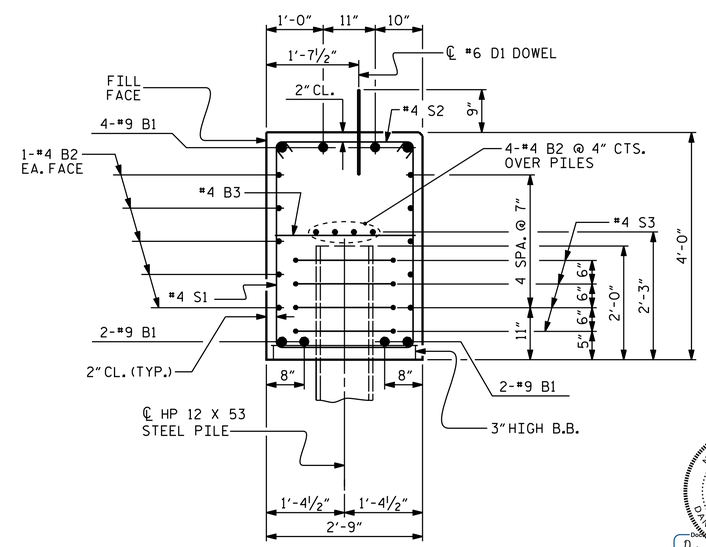

SECTION A-A

(CONCRETE COLLAR NOT SHOWN FOR CLARITY. SEE "CORROSION PROTECTION FOR STEEL PILES DETAIL.")

PROJECT NO. 17BP.1.R.92
NORTHAMPTON COUNTY
STATION: 14+22.50 -L-

SHEET 3 OF 3

STATE OF NORTH CAROLINA
DEPARTMENT OF TRANSPORTATION
RALEIGH

SUBSTRUCTURE

END BENT No. 2 DETAILS

NORTH CAROLINA PROFESSIONAL SEAL 036548 ENGINEER DANIEL H. BURGUNDY

Daniel H. Burgundy
5/4/2021

ASSEMBLED BY : CAB	DATE : 4/19
CHECKED BY : MHR	DATE : 6/19
DRAWN BY : WJH 12/11	REV. 4/17 MAA/THC
CHECKED BY : AAC 12/11	

DOCUMENT NOT CONSIDERED FINAL UNLESS ALL SIGNATURES COMPLETED

REVISIONS								SHEET NO.
NO.	BY:	DATE:	NO.	BY:	DATE:			S-20
1			3					TOTAL SHEETS
2			4					22

STD. NO. EB_30_90S4