DocuSign Envelope ID: 176B53D9-CE85-4A3A-BFC6-B411219DD6EE

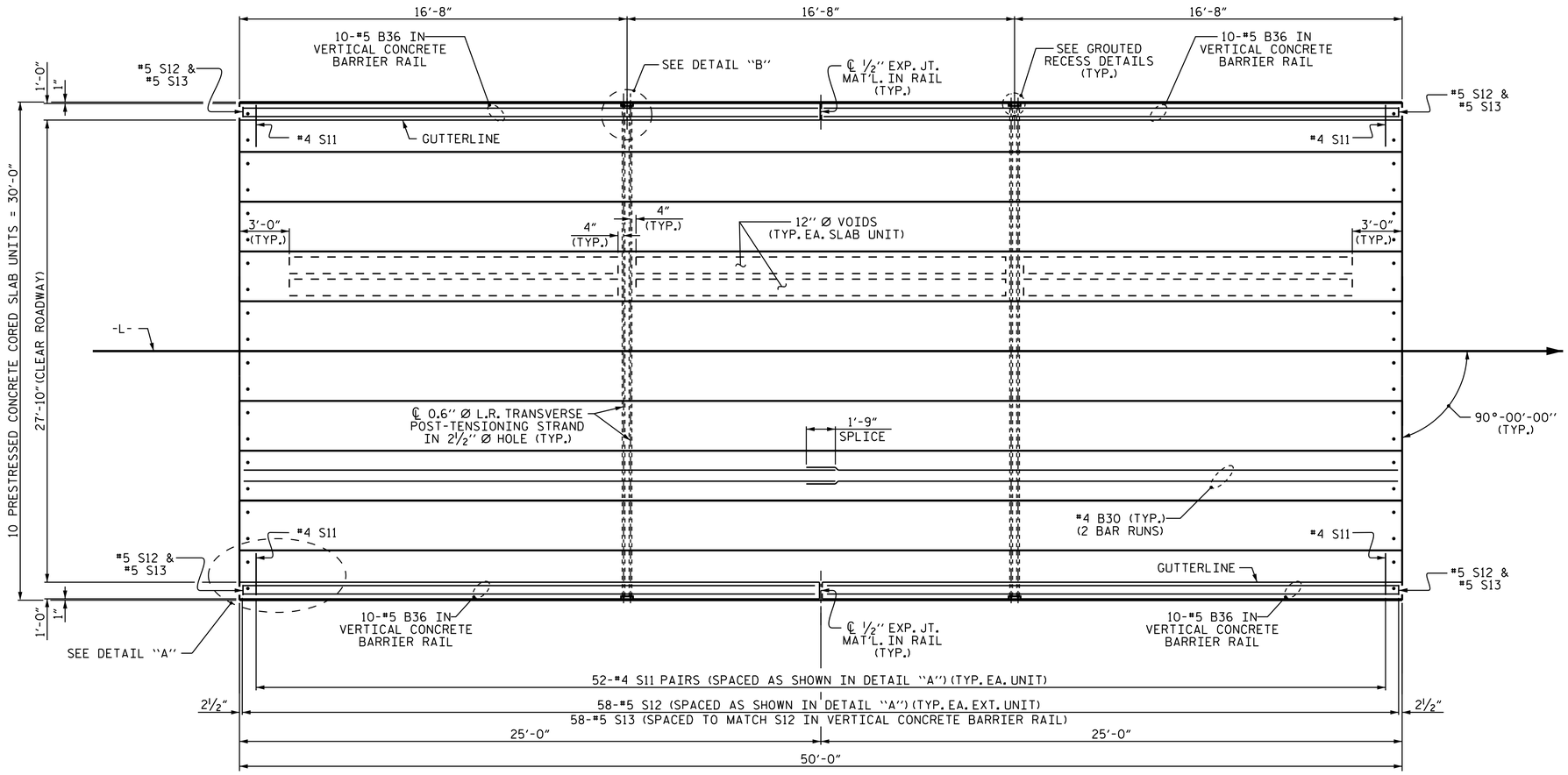

PLAN OF UNIT

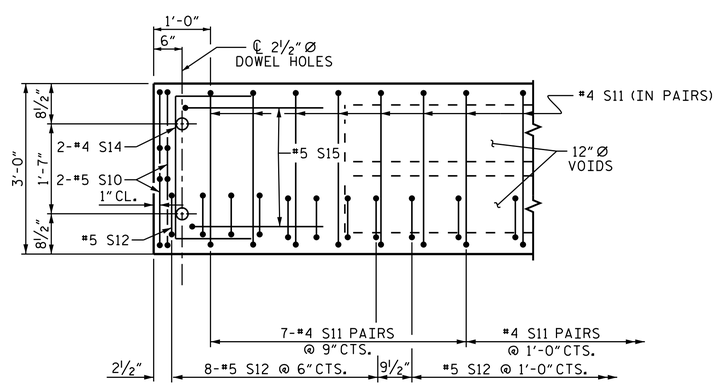

DETAIL "A"

(TYPICAL EACH END OF UNIT)
NOTE: EXTERIOR UNIT SHOWN - INTERIOR UNIT SIMILAR EXCEPT OMIT #5 S12 BARS.

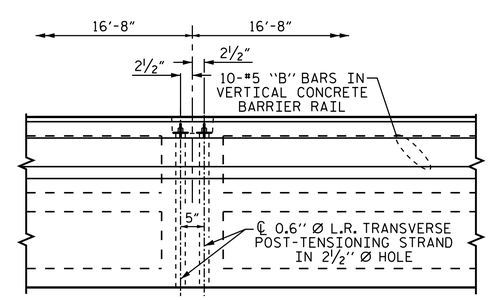

DETAIL "B"

#4 S11 BARS MAY BE SHIFTED AS NECESSARY TO MAINTAIN 1" CLEAR TO GROUTED RECESS AND 2 1/2" Ø TRANSVERSE POST-TENSIONING STRAND HOLES

PROJECT NO. 17BP.1.R.92
NORTHAMPTON COUNTY
STATION: 14+22.50 -L-

SHEET 2 OF 5

STATE OF NORTH CAROLINA
DEPARTMENT OF TRANSPORTATION
RALEIGH

PLAN OF 50' UNIT 27'-10" CLEAR ROADWAY 90° SKEW

NORTH CAROLINA PROFESSIONAL SEAL 036548 ENGINEER DANIEL M. BURGUNDY
DOCUSIGNED BY: Daniel M. Burgundy
4F0B9D4A7EEC4B7...
5/4/2021

ASSEMBLED BY : CAB		DATE : 4/19	
CHECKED BY : MHR		DATE : 6/19	
DRAWN BY : MAA 7/10	REV. 12/5/11	MAA/AAC	
CHECKED BY : MKT 8/10	REV. 8/14	MAA/TMG	

DOCUMENT NOT CONSIDERED FINAL UNLESS ALL SIGNATURES COMPLETED

REVISIONS								
NO.	BY:	DATE:	NO.	BY:	DATE:	SHEET NO.	S-7
1			3			TOTAL SHEETS	22
2			4				

STD. NO. 24PCS_30_90S_50L (TOP DOWN)