DocuSign Envelope ID: 176B53D9-CE85-4A3A-BFC6-B411219DD6EE

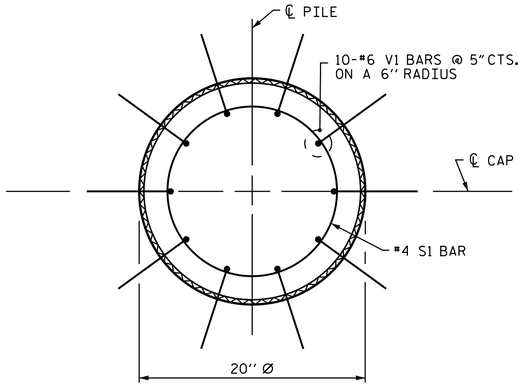

PLAN

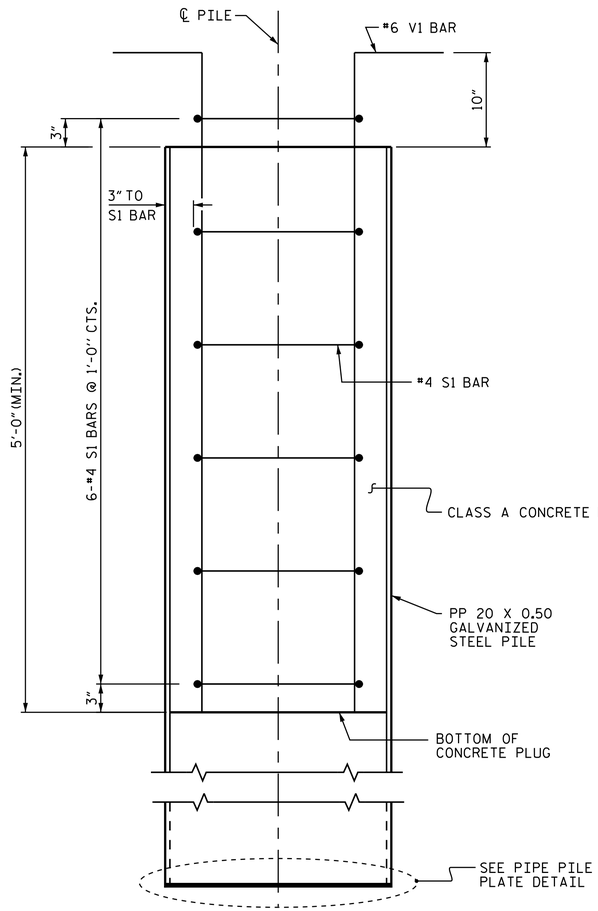

ELEVATION

PP 20 X 0.50 GALVANIZED STEEL PILE

(CLOSED END)

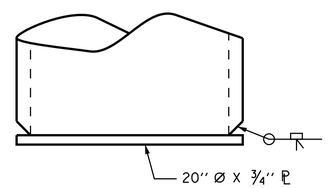

PIPE PILE PLATE DETAIL

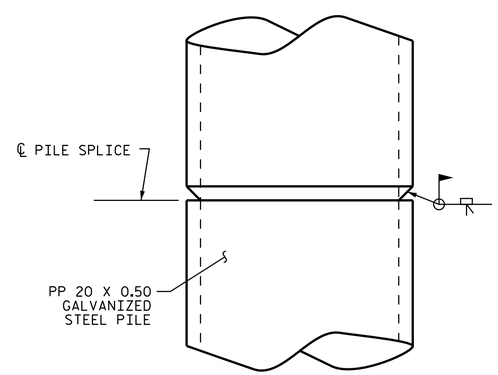

PIPE PILE SPLICE DETAIL

NOTES

PIPE PILES SHALL BE IN ACCORDANCE WITH SECTION 1084 OF THE STANDARD SPECIFICATIONS.

GALVANIZE STEEL PIPE PILES IN ACCORDANCE WITH SECTION 1076 OF THE STANDARD SPECIFICATIONS.

PIPE PILE PLATES, IF REQUIRED, SHALL BE IN ACCORDANCE WITH SECTION 450 OF THE STANDARD SPECIFICATIONS.

REMOVE AND REPLACE OR REPAIR TO THE SATISFACTION OF THE ENGINEER PILES THAT ARE DAMAGED, DEFORMED OR COLLAPSED DURING INSTALLATION OR DRIVING.

PILE SPLICES SHALL BE IN ACCORDANCE WITH THE STANDARD SPECIFICATIONS AND AWS D1.1.

FOR CLOSED END PIPE PILES, REMOVE ALL SOIL AND WATER FROM INSIDE THE PILES JUST PRIOR TO PLACING REINFORCING STEEL AND CONCRETE FOR THE CONCRETE PLUG.

FORM THE CONCRETE PLUG SUCH THAT THE REINFORCING STEEL OR CONCRETE DOES NOT MOVE AND THE CLEARANCE FROM THE REINFORCING STEEL TO THE INSIDE OF THE PILE IS MAINTAINED AFTER CONCRETE PLACEMENT. DO NOT PLACE CONCRETE IN THE BENT CAP UNTIL THE CONCRETE PLUG HAS ATTAINED A MINIMUM COMPRESSIVE STRENGTH OF 1500 PSI.

THE REINFORCING STEEL, CLASS A CONCRETE, AND GALVANIZING ARE CONSIDERED INCIDENTAL TO THE CONTRACT UNIT PRICE BID PER LINEAR FOOT FOR PP 20 X 0.50 GALVANIZED STEEL PILES.

BILL OF MATERIAL FOR ONE PP 20 X 0.50 GALVANIZED STEEL PILE

BAR	NO.	SIZE	TYPE	LENGTH	WEIGHT
S1	6	#4	1	5'-0"	20
V1	10	#6	2	6'-8"	100
REINFORCING STEEL =				120	lbs
CLASS A CONCRETE					
5'-0" MINIMUM PLUG					0.5 CY

BAR TYPES

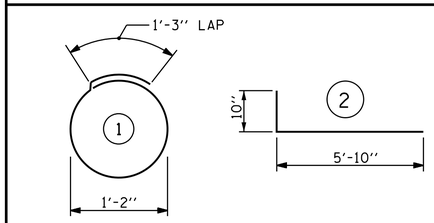

ALL BAR DIMENSIONS ARE OUT TO OUT.

PROJECT NO. 17BP.1.R.92

NORTHAMPTON COUNTY

STATION: 14+22.50 -L-

SHEET 3 OF 3

STATE OF NORTH CAROLINA
DEPARTMENT OF TRANSPORTATION
RALEIGH

STANDARD

20" STEEL PIPE PILE

NORTH CAROLINA PROFESSIONAL SEAL 036548 ENGINEER DANIEL M. BURGUNDY

DocuSigned by: Daniel M. Burgundy
5/4/2021

ASSEMBLED BY : CAB	DATE : 4/19
CHECKED BY : MHR	DATE : 6/19

DRAWN BY : TLA 8/05	REV. 5/1/06R MAA/KMM
CHECKED BY : GM 9/05	REV. 10/1/11 MAA/GM
	REV. 12/17 MAA/THC

DOCUMENT NOT CONSIDERED FINAL UNLESS ALL SIGNATURES COMPLETED

REVISIONS								SHEET NO.
NO.	BY:	DATE:	NO.	BY:	DATE:			S-17
1			3					TOTAL SHEETS
2			4					22

STD. NO. SPP4