DocuSign Envelope ID: 176B53D9-CE85-4A3A-BFC6-B411219DD6EE

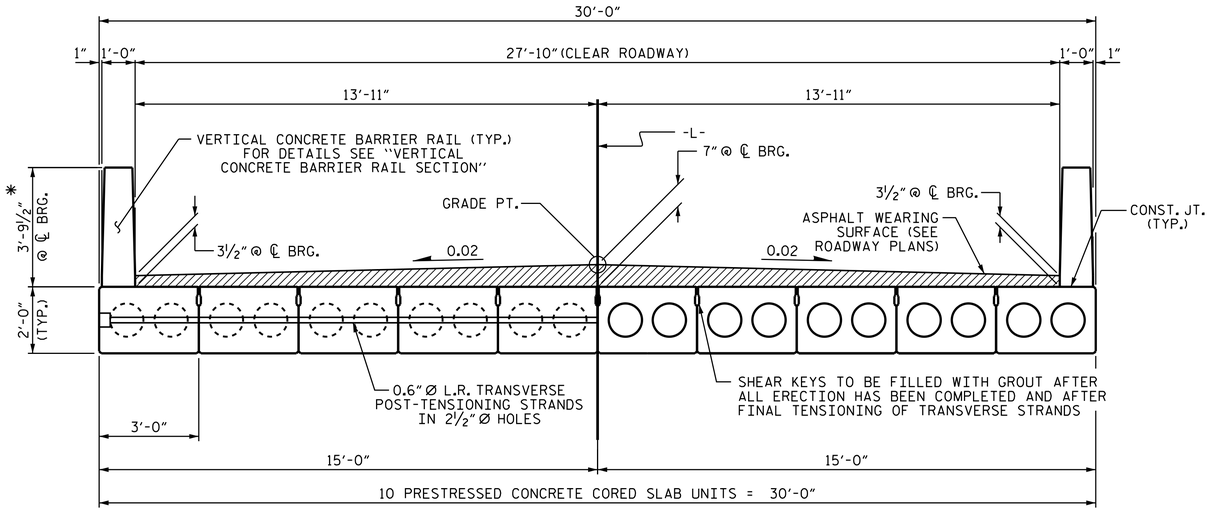


HALF SECTION
AT INTERMEDIATE DIAPHRAGMS

# TYPICAL SECTION

HALF SECTION
THROUGH VOIDS

✱ - THE MAXIMUM BARRIER RAIL HEIGHT AND ASPHALT THICKNESS IS SHOWN. THE HEIGHT OF THE BARRIER RAIL AND ASPHALT THICKNESS VARIES WHILE THE TOP OF THE BARRIER RAIL FOLLOWS THE PROFILE OF THE GUTTERLINE. FOR RAIL HEIGHT DETAILS AND ASPHALT THICKNESS, SEE THE "VERTICAL CONCRETE BARRIER RAIL SECTION" DETAIL.

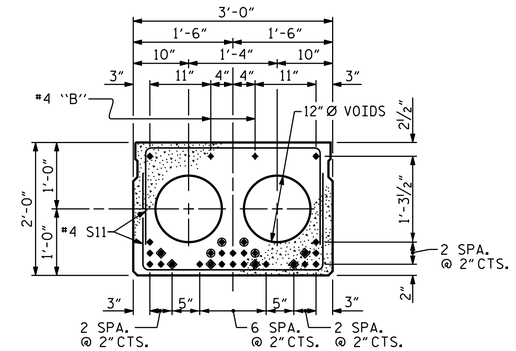


INTERIOR SLAB SECTION (65' UNIT)
(24 STRANDS REQUIRED)

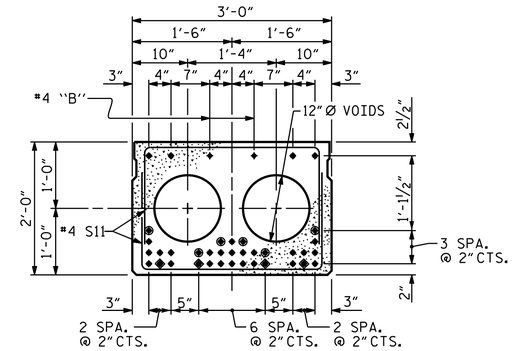


INTERIOR SLAB SECTION (50' UNIT)
(31 STRANDS REQUIRED)

# 0.6" Ø LOW RELAXATION STRAND LAYOUT

◈ BOND SHALL BE BROKEN ON THESE STRANDS FOR A DISTANCE OF 12'-0" FROM END OF CORED SLAB UNIT. SEE STANDARD SPECIFICATIONS, ARTICLE 1078-7.

◉ OPTIONAL FULL LENGTH DEBONDED STRANDS. THESE STRANDS ARE NOT REQUIRED. IF THE FABRICATOR CHOOSES TO INCLUDE THESE STRANDS IN THE CORED SLAB UNIT, THE STRANDS SHALL BE DEBONDED FOR THE FULL LENGTH OF THE UNIT AT NO ADDITIONAL COST. SEE STANDARD SPECIFICATIONS, ARTICLE 1078-7.

# DEBONDING LEGEND

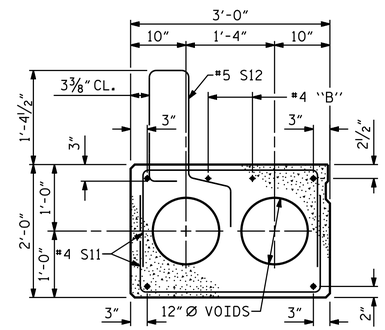


EXTERIOR SLAB SECTION

(FOR PRESTRESSED STRAND LAYOUT, SEE INTERIOR SLAB SECTION.)

FIXED END

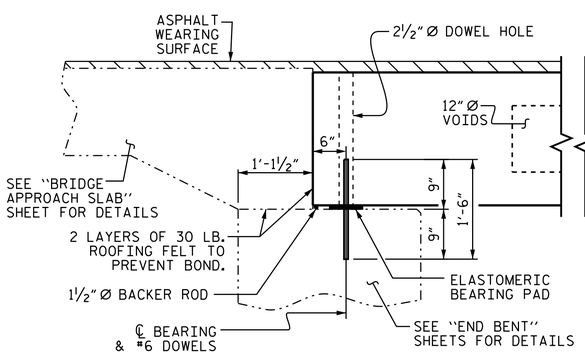


SECTION AT END BENT

FIXED END FIXED END

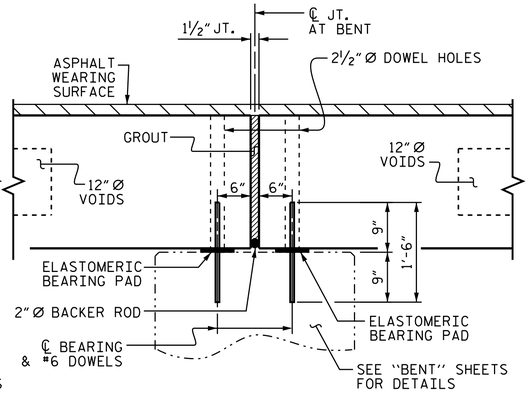


SECTION AT BENT

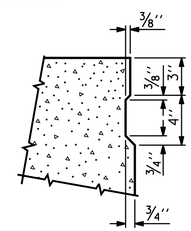


SHEAR KEY DETAIL

NOTE: OMIT SHEAR KEY ON OUTSIDE FACE OF EXTERIOR CORED SLABS.

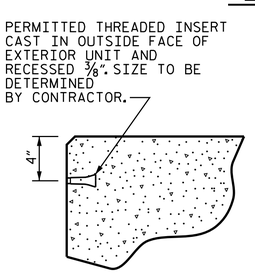


THREADED INSERT DETAIL

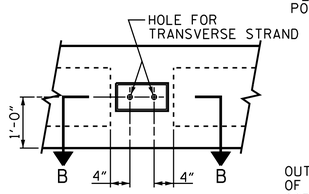


ELEVATION VIEW

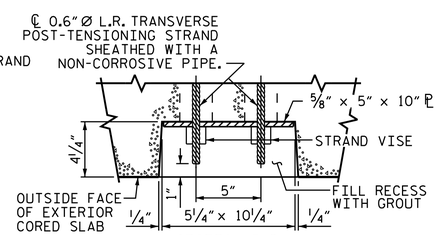


SECTION B-B

# GROUTED RECESS AT END OF POST-TENSIONED STRAND-CORED SLABS

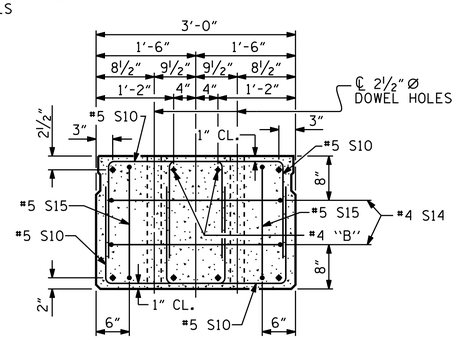


# END ELEVATION

SHOWING PLACEMENT OF DOUBLE STIRRUPS AND LOCATION OF DOWEL HOLES. (STRAND LAYOUT NOT SHOWN.) INTERIOR SLAB UNIT SHOWN-EXTERIOR SLAB UNIT SIMILAR EXCEPT SHEAR KEY LOCATION.

PROJECT NO. 17BP.1.R.92
NORTHAMPTON COUNTY
STATION: 14+22.50. -L-

SHEET 1 OF 5

STATE OF NORTH CAROLINA
DEPARTMENT OF TRANSPORTATION
RALEIGH

STANDARD

# 3'-0" X 2'-0" PRESTRESSED CONCRETE CORED SLAB UNIT

NORTH CAROLINA PROFESSIONAL SEAL 036548 ENGINEER DANIEL M. BURGINDY
DocuSigned by: Daniel M. Burgindy
5/4/2021

| | | | |
|---|---|---|---|
| ASSEMBLED BY : CAB | DATE : 4/19 | | |
| CHECKED BY : MHR | DATE : 6/19 | | |
| DRAWN BY : MAA 6/10 | REV. 8/14 | MAA/TMG | |
| CHECKED BY : MKT 7/10 | | | |

DOCUMENT NOT CONSIDERED FINAL UNLESS ALL SIGNATURES COMPLETED

| REVISIONS | | | | | | | SHEET NO. |
|---|---|---|---|---|---|---|---|
| NO. | BY: | DATE: | NO. | BY: | DATE: | | S-6 |
| 1 | | | 3 | | | | TOTAL SHEETS |
| 2 | | | 4 | | | | 22 |

STD. NO. 24PCS4_30_90S