DocuSign Envelope ID: 176B53D9-CE85-4A3A-BFC6-B411219DD6EE

NOTES

STIRRUPS IN CAP MAY BE SHIFTED AS NECESSARY TO CLEAR DOWELS.

★ INVERT ALTERNATE STIRRUPS.

FOR ADDITIONAL REINFORCING STEEL IN PP20X0.5 GALVANIZED STEEL PILES, SEE SHEET 3 OF 3.

GALVANIZE THE FULL LENGTH OF EACH INTERIOR BENT PILE IN ACCORDANCE WITH SECTION 1076 OF THE STANDARD SPECIFICATIONS.

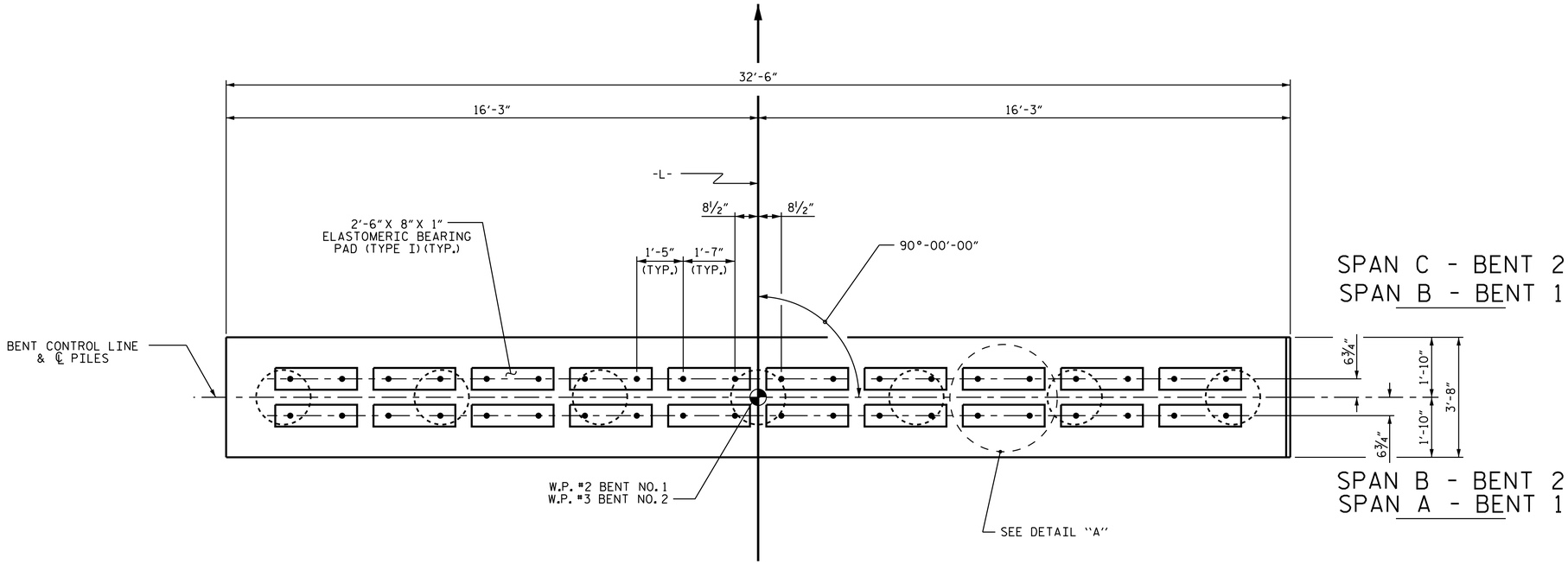

PLAN

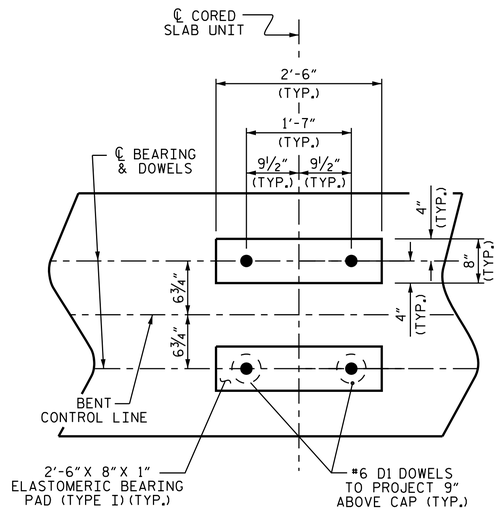

DETAIL "A"

(DIMENSIONS ARE TYPICAL EACH BEARING)

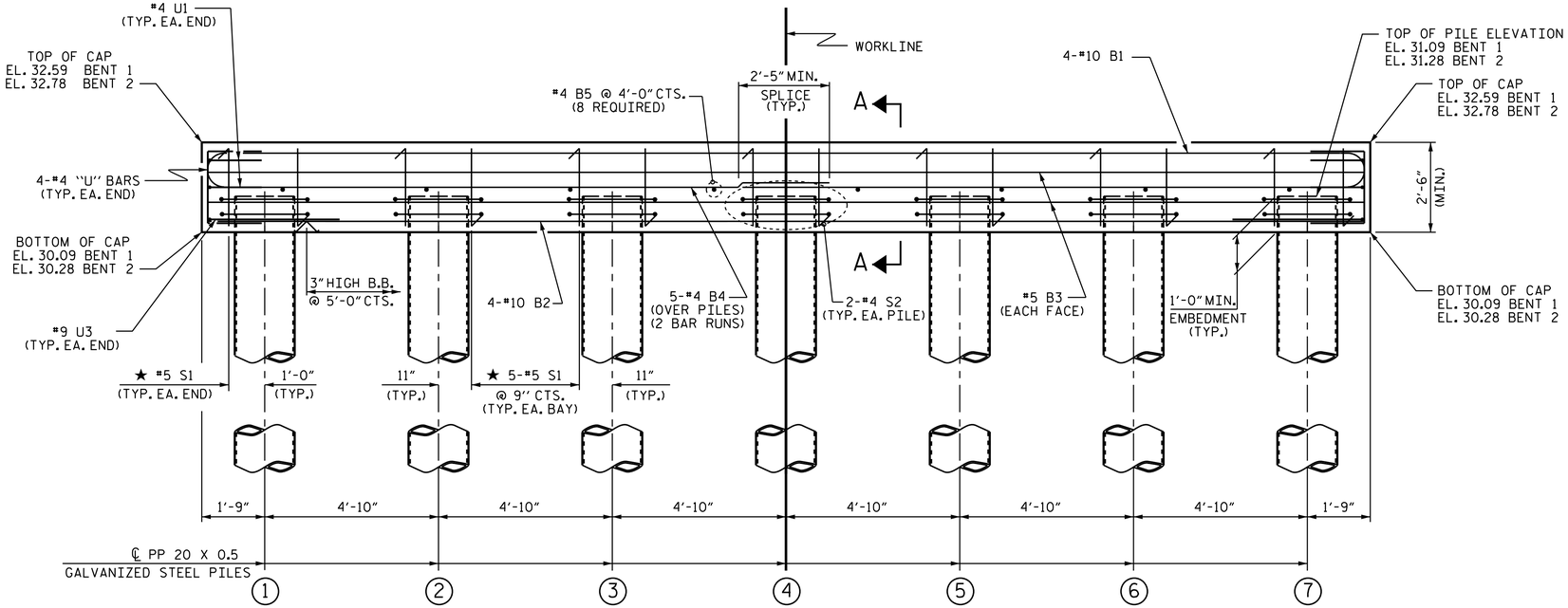

ELEVATION

FOR SECTION A-A, SEE SHEET 2 OF 3

PROJECT NO. 17BP.1.R.92

NORTHAMPTON COUNTY

STATION: 14+22.50 -L-

SHEET 1 OF 3

STATE OF NORTH CAROLINA
DEPARTMENT OF TRANSPORTATION
RALEIGH

SUBSTRUCTURE

BENTS No. 1 & 2

NORTH CAROLINA PROFESSIONAL SEAL 036548 ENGINEER DANIEL M. BURGUNDY

Daniel M. Burgundy
5/4/2021

ASSEMBLED BY : CAB	DATE : 4/19
CHECKED BY : MHR	DATE : 6/19
DRAWN BY : DGE 05/10	REV. 6/17 MAA/THC
CHECKED BY : MKT 05/10	

DOCUMENT NOT CONSIDERED FINAL UNLESS ALL SIGNATURES COMPLETED

REVISIONS								SHEET NO.
NO.	BY:	DATE:	NO.	BY:	DATE:			S-15
1			3					TOTAL SHEETS
2			4					22

STD.NO. 20"PS_BT_30_90S_<60'