DocuSign Envelope ID: 176B53D9-CE85-4A3A-BFC6-B411219DD6EE

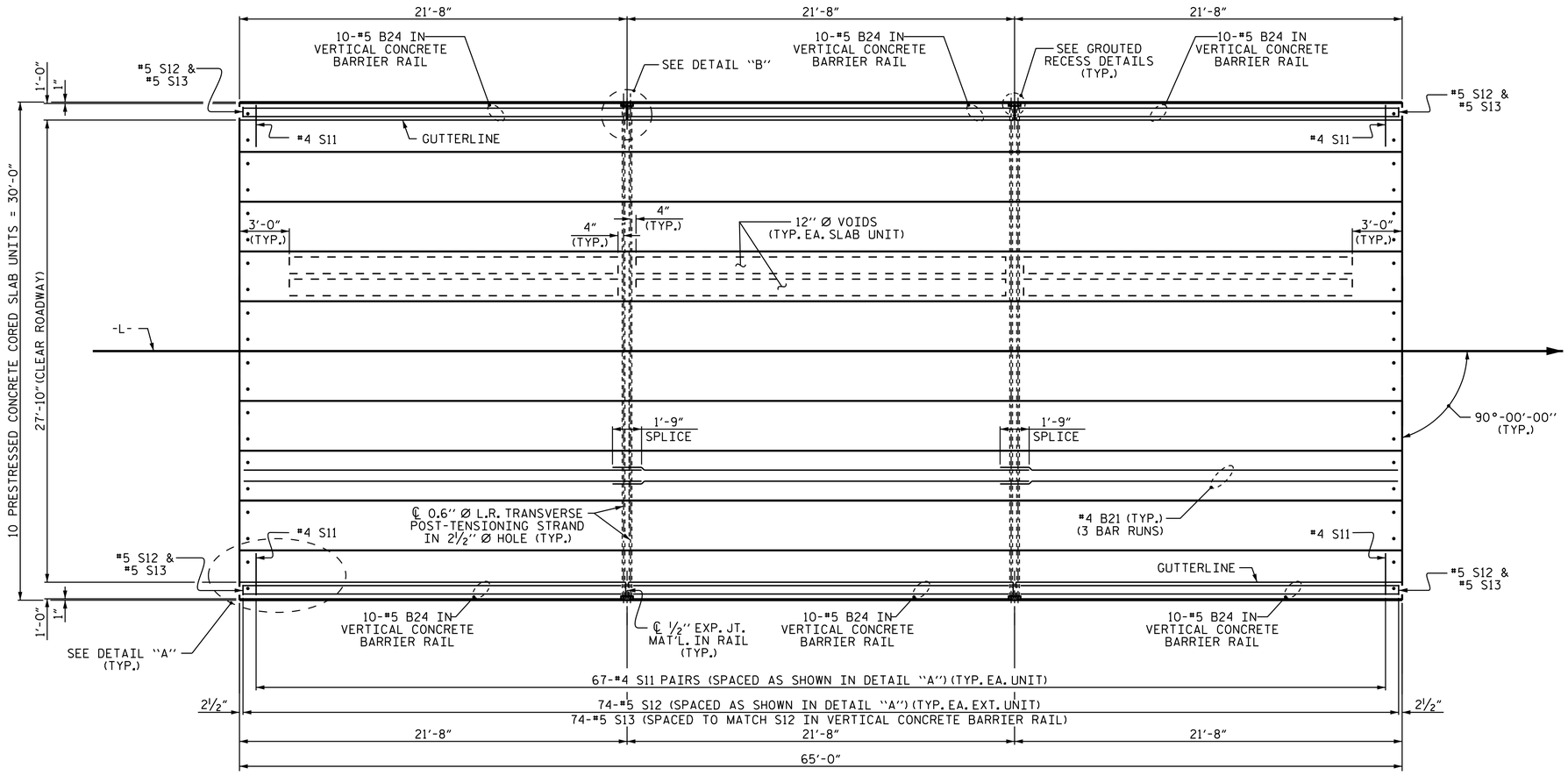

PLAN OF UNIT

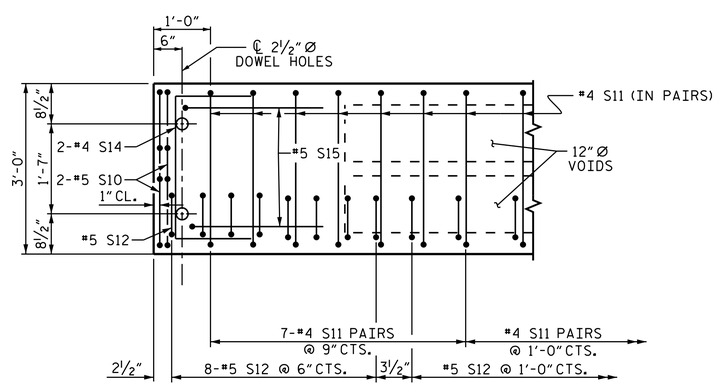

DETAIL "A"

(TYPICAL EACH END OF UNIT)
NOTE: EXTERIOR UNIT SHOWN - INTERIOR UNIT SIMILAR EXCEPT OMIT #5 S12 BARS.

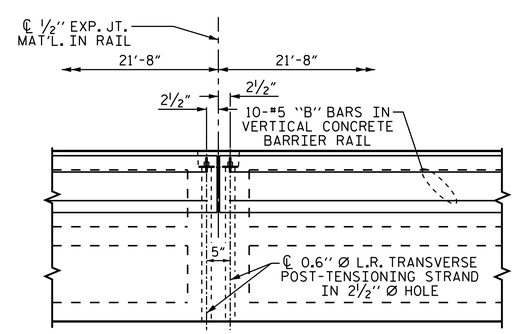

DETAIL "B"

#4 S11 BARS MAY BE SHIFTED AS NECESSARY TO MAINTAIN 1" CLEAR TO GROUTED RECESS AND 2½" Ø TRANSVERSE POST-TENSIONING STRAND HOLES

PROJECT NO. 1BP.1.R.927
NORTHAMPTON COUNTY
STATION: 14+22.50 -L-

SHEET 3 OF 5

STATE OF NORTH CAROLINA
DEPARTMENT OF TRANSPORTATION
RALEIGH

PLAN OF 65' UNIT 27'-10" CLEAR ROADWAY 90° SKEW

NORTH CAROLINA PROFESSIONAL SEAL 036548 ENGINEER DANIEL K. BURGUNDY
5/4/2021

ASSEMBLED BY : CAB		DATE : 4/19	
CHECKED BY : MHR		DATE : 6/19	
DRAWN BY : MAA	6/10	REV. 12/5/11	MAA/AAC
CHECKED BY : MKT	7/10	REV. 8/14	MAA/TMC

DOCUMENT NOT CONSIDERED FINAL UNLESS ALL SIGNATURES COMPLETED

REVISIONS							SHEET NO.
NO.	BY:	DATE:	NO.	BY:	DATE:		S-8
1			3				TOTAL SHEETS
2			4				22

STD. NO. 24PCS_30_90S_65L