DocuSign Envelope ID: 176B53D9-CE85-4A3A-BFC6-B411219DD6EE

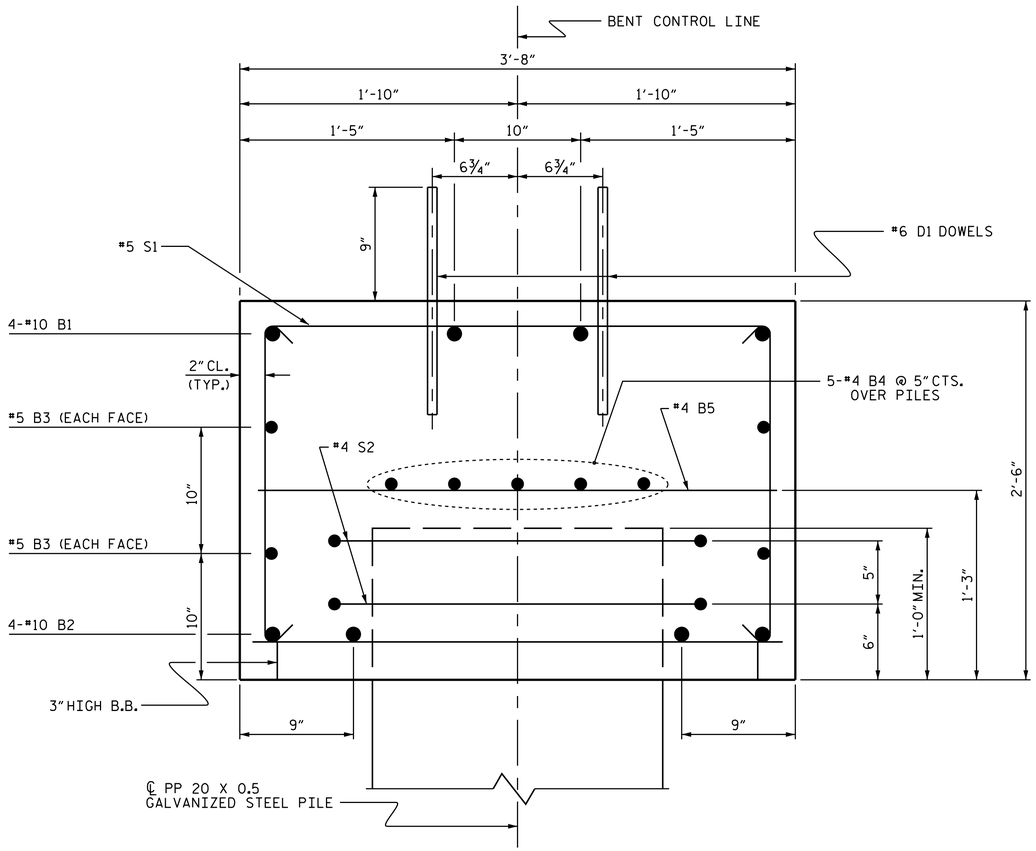

SECTION A-A

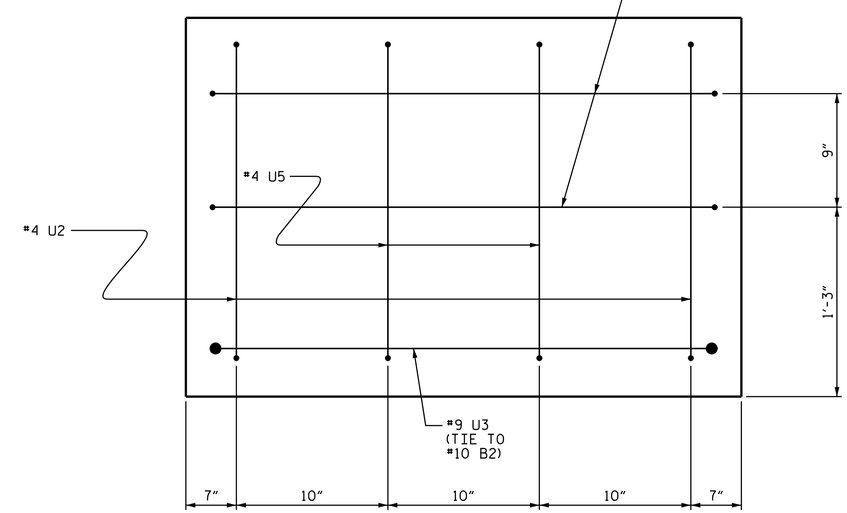

END OF CAP VIEW

(TYPICAL BOTH ENDS)

BAR TYPES

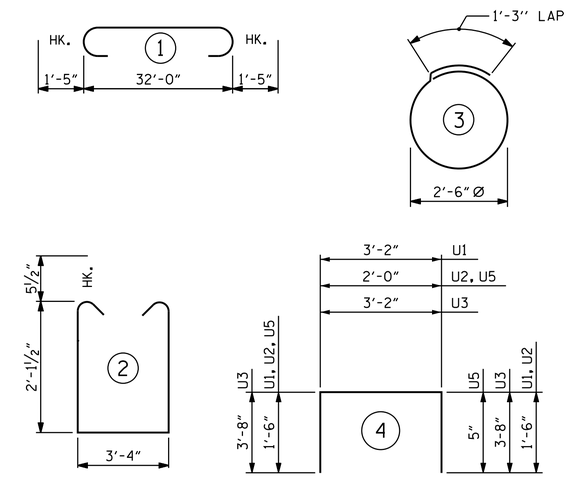

ALL BAR DIMENSIONS ARE OUT TO OUT.

BILL OF MATERIAL
FOR ONE BENT

BAR	NO.	SIZE	TYPE	LENGTH	WEIGHT
B1	4	#10	1	34'-10"	600
B2	4	#10	STR	32'-2"	554
B3	4	#5	STR	32'-2"	134
B4	10	#4	STR	17'-4"	116
B5	8	#4	STR	3'-4"	18
D1	40	#6	STR	1'-6"	90
S1	32	#5	2	8'-6"	284
S2	14	#4	3	9'-2"	86
U1	4	#4	4	6'-2"	16
U2	4	#4	4	5'-0"	13
U3	2	#9	4	10'-6"	71
U5	4	#4	4	3'-11"	10

REINFORCING STEEL (BENT NO. 1) 1992 LBS

CLASS A CONCRETE BREAKDOWN (BENT NO. 1)

TOTAL CLASS A CONCRETE 11.0 C.Y.

20 X 0.5" GALVANIZED STEEL PIPE PILES (BENT NO. 1)

NO. 7 LIN. FT. 427

PILE DRIVING EQUIPMENT SETUP FOR 20 X 0.5" GALVANIZED STEEL PIPE PILES (BENT NO. 1) NO. 7

PILE REDRIVES (BENT NO. 1) NO. 4

REINFORCING STEEL (BENT NO. 2) 1992 LBS

CLASS A CONCRETE BREAKDOWN (BENT NO. 2)

TOTAL CLASS A CONCRETE 11.0 C.Y.

20 X 0.5" GALVANIZED STEEL PIPE PILES (BENT NO. 2)

NO. 7 LIN. FT. 427

PILE DRIVING EQUIPMENT SETUP FOR 20 X 0.5" GALVANIZED STEEL PIPE PILES (BENT NO. 2) NO. 7

PILE REDRIVES (BENT NO. 2) NO. 4

PROJECT NO. 17BP.1.R.92

NORTHAMPTON COUNTY

STATION: 14+22.50 -L-

SHEET 2 OF 3

STATE OF NORTH CAROLINA
DEPARTMENT OF TRANSPORTATION
RALEIGH

SUBSTRUCTURE

BENTS No. 1 & 2

NORTH CAROLINA PROFESSIONAL SEAL 036548 ENGINEER DANIEL K. BURGUNDY

Daniel K. Burgundy
5/4/2021 | 7EEC4B7...

ASSEMBLED BY : CAB	DATE : 4/19
CHECKED BY : MHR	DATE : 6/19
DRAWN BY : DGE 05/10	REV. 6/17 MAA/THC
CHECKED BY : MKT 05/10	

DOCUMENT NOT CONSIDERED FINAL UNLESS ALL SIGNATURES COMPLETED

REVISIONS								SHEET NO.
NO.	BY:	DATE:	NO.	BY:	DATE:			S-16
1			3					TOTAL SHEETS
2			4					22

STD. NO. 20" PS_BT_30_90S_<60'